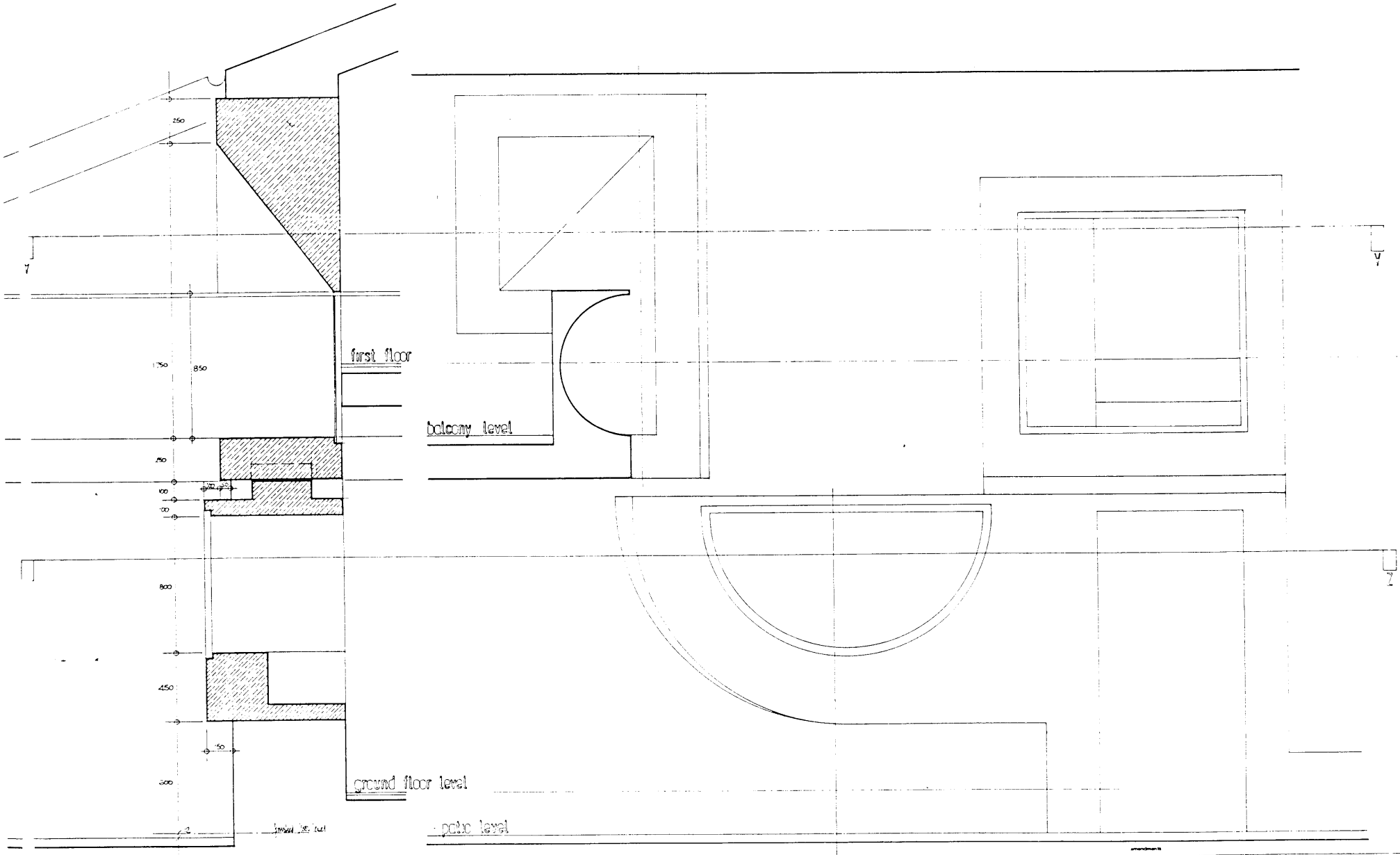


SECTION D D

EXTERNAL ELEVATION

el compet

DS

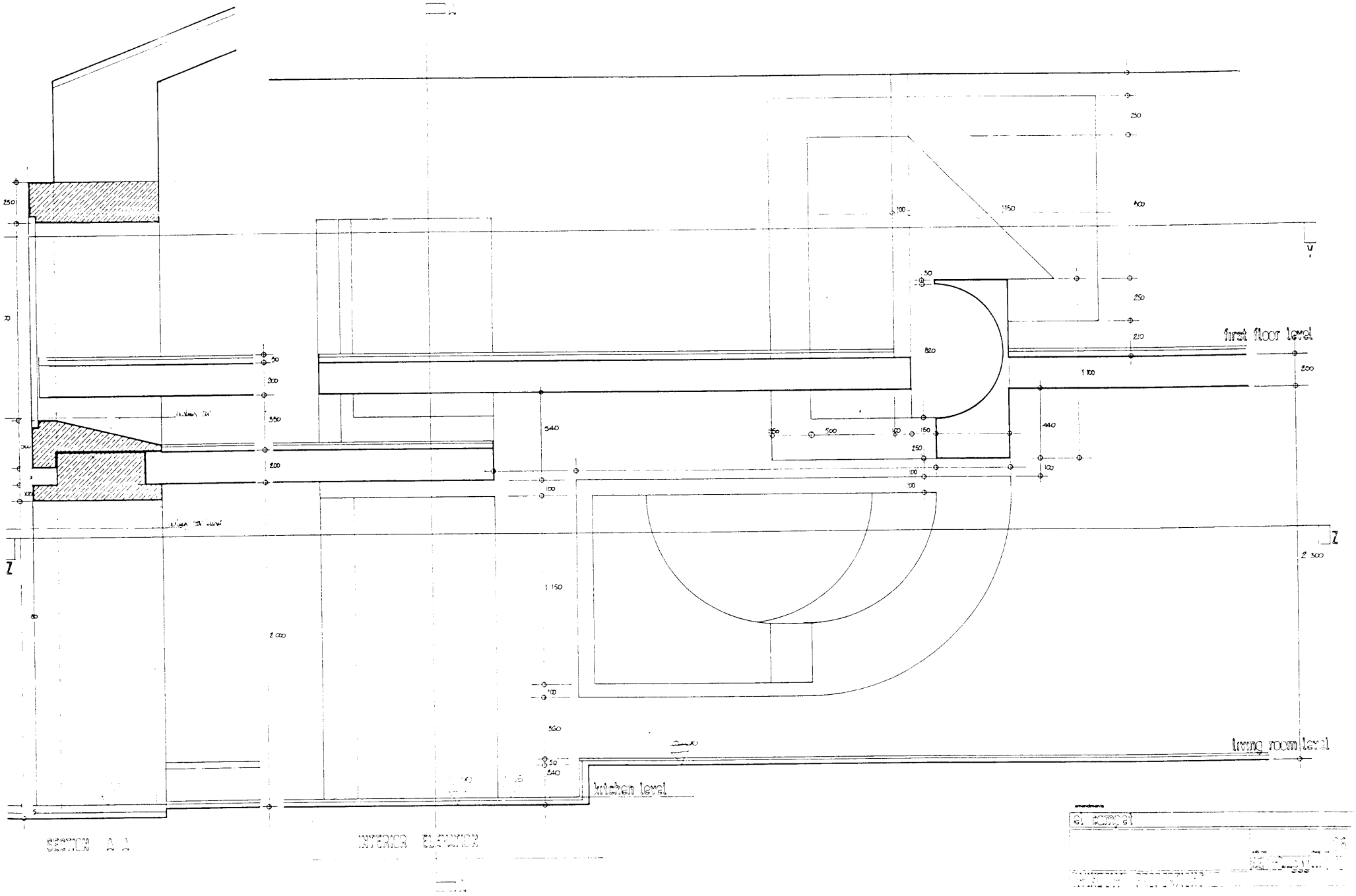
first floor level
living room level
kitchen level
SECTION A A
INTERIOR ELEVATION

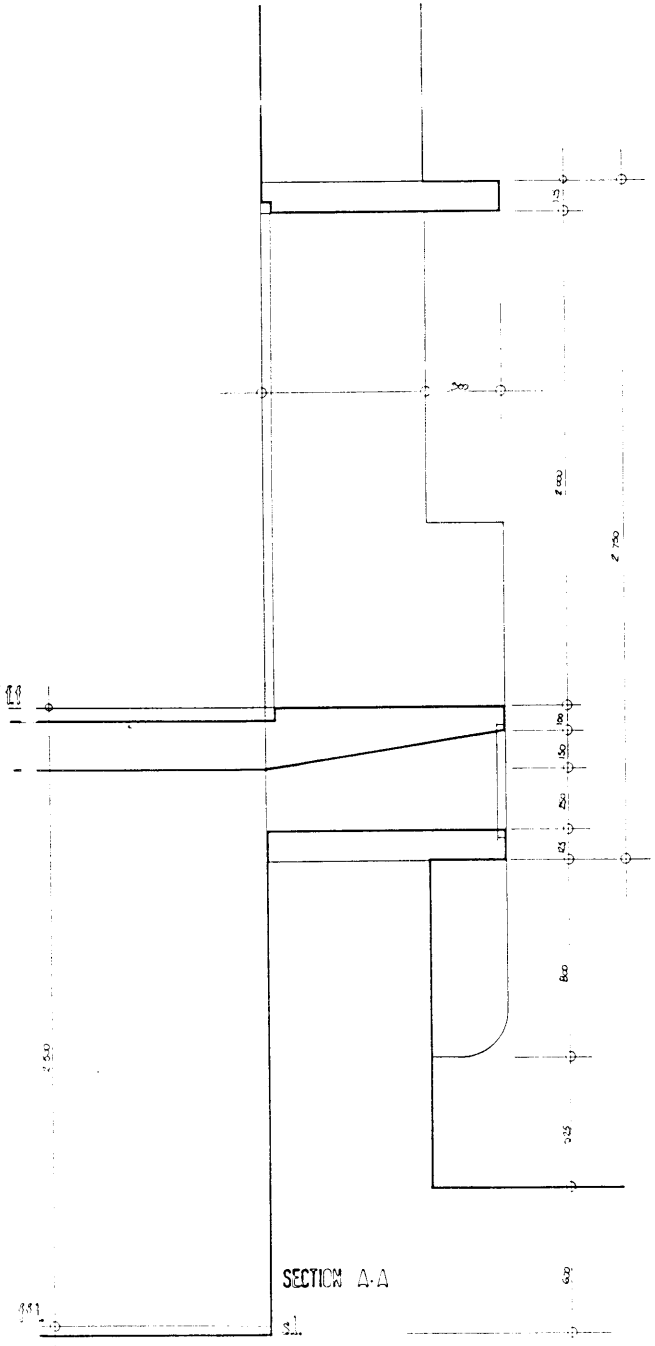


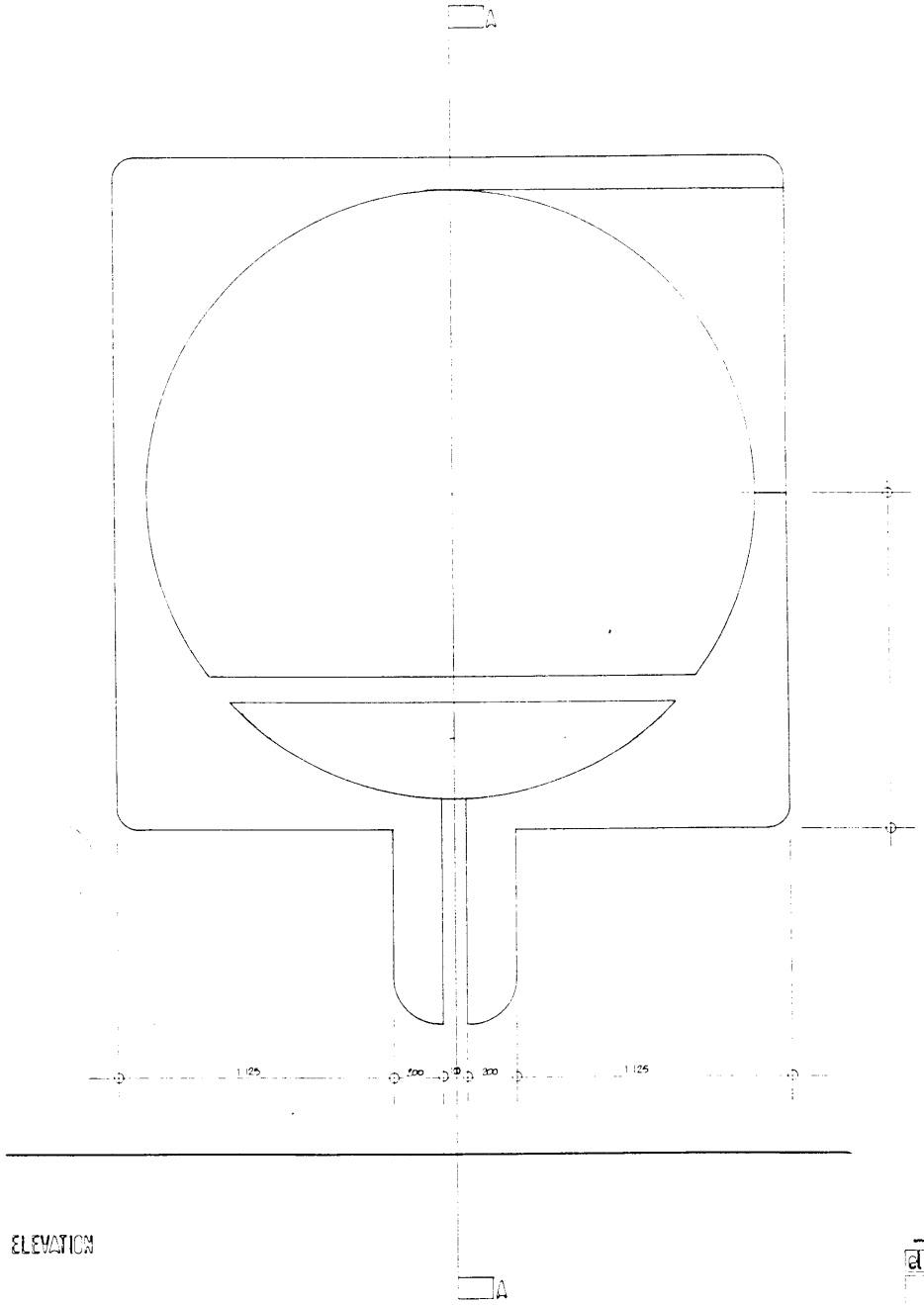


el compet